Single universal CAN isolation transceiver module



CE Report EN62368-1 RoHS

3 years Warranty

FEATURES

- Integrated high efficiency isolated DC/DC converter
- Two-port isolation (3kVDC)
- High baud rate up to 1Mbps
- Operating temperature range: -40℃ to +105℃
- Complies with ISO 11898 standard
- An unpowered node does not disturb the bus lines
- The bus supports maximum 110 nodes
- Set isolation and ESD bus protection in one

The TD301DCAN/ TD501DCAN series' main function is to convert TTL / CMOS level into isolated CAN bus differential level signals. The use of IC integrated technology allows for power isolation, signal isolation, CAN transceiver and bus protection all in one single CAN bus transceiver module, which withstands an isolation test voltage of 3000VDC. Also, they can easily be embedded in the user's end equipment, to achieve fully functional CAN bus network connectivity.

Selection Guide

Certification	Part No.	Power input (VDC)	Baud Rate (bps)	Static Current (mA)	Maximum Operating Current(mA)	Bus Maximum Voltage(VDC)	Number of Nodes
EN	TD301DCAN	3.3	5k-1M	50	90	±30	110
--	TD501DCAN	5	5k-1M	35	80	±30	110

Absolute Limits

Item	Operating Conditions	Min.	Typ.	Max.	Unit
Input Surge Voltage (1sec.max.)	3.3V series	-0.7	--	5	VDC
	5V series	-0.7	--	7	
Pin Soldering Temperature	Soldering spot 1.5mm away from case, 10s max.	--	--	300	℃

3.3V Series input Specifications

Item		Symbol	Min.	Typ.	Max.	Unit
Power Supply Input Voltage		VCC	3.15	3.3	3.45	VDC
TXD Logic Level	High-level	V_{IH}	0.7Vcc	--	Vcc+0.5	
	Low-level	V_{IL}	0	--	0.8	
RXD Logic Level	High-level	V_{OH}	Vcc-0.4	Vcc-0.2	--	
	Low-level	V_{OL}	--	0.2	0.4	
TXD Drive Current		I_T	2	--	--	mA
RXD Output Current		I_R	--	--	10	
Serial Interface		Standard CAN controller interface for +3.3V				

5V Series Input Specifications

Item		Symbol	Min.	Typ.	Max.	Unit
Power Supply Input Voltage		VCC	4.75	5	5.25	VDC
TXD Logic Level	High-level	V_{IH}	0.7Vcc	--	Vcc+0.5	
	Low-level	V_{IL}	0	--	0.8	
RXD Logic Level	High-level	V_{OH}	Vcc-0.4	Vcc-0.2	--	
	Low-level	V_{OL}	--	0.2	0.4	
TXD Drive Current		I_T	2	--	--	mA
RXD Output Current		I_R	--	--	10	
Serial Interface		Standard CAN controller interface for +5V				

MORNSUN Guangzhou Science & Technology Co., Ltd. reserves the copyright and right of final interpretation

Transmission Specifications

Item		Symbol	Min.	Typ.	Max.	Unit
Data Delay	TXD Transmitter Delay	t_T	--	60	115	ns
	RXD Receiver Delay	t_R	--	70	135	
	Cycle Delay	$t_{PRO(TXD-RXD)}$	--	130	250	

Output Specifications

Item		Symbol	Min.	Typ.	Max.	Unit
Dominant Level (Logic 0)	CANH	$V_{(OD)CANH}$	2.75	3.5	4.5	VDC
	CANL	$V_{(OD)CANL}$	0.5	1.5	2	
Recessive Level (Logic 1)	CANH	$V_{(OR)CANH}$	2	2.5	3	
	CANL	$V_{(OR)CANL}$	2	2.5	3	
Differential Level	Dominant Level (Logic 0)	$V_{diff(d)}$	1.5	2	3	
	Recessive Level (Logic 1)	$V_{diff(r)}$	-0.12	0	0.05	
Bus Pin Maximum Withstand Voltage		V_X	-30	--	+30	
Bus Transient Voltage		V_{trt} , Meet ISO7637-3 standard	-200	--	+200	
Load Resistance Differential		R_L	50	60	65	Ω
Input Impedance Differential		R_{diff}	20	--	100	kΩ
CAN Bus Interface		Meets ISO/DIS 11898-2 standard twisted-pair output				
Note: The Recessive level (Logic 1) is the no-load specification						

General Specifications

Item	Operating Conditions	Value
Isolation Voltage	Electric strength test for 1 min., leakage current <1mA	3kVDC
Insulation Resistance	At 500VDC	1000MΩ (input-output)
Operating Temperature		-40℃ to +105℃
Transportation and Storage Temperature		-50℃ to +125℃
Operating Humidity	Non-condensing	10% - 90%
Safety Standard		EN62368-1 (Report)
Safety Class		CLASS III

Mechanical Specifications

Case Material	Black flame-retardant heat-proof plastic (UL94 V-0)
Dimensions	DIP8
Weight	4.0g (Typ.)
Cooling Method	Free air convection

Electromagnetic Compatibility (EMC)

Emission	CE	CISPR32/EN55032	CLASS A (see Fig. 3)	
Immunity	ESD	IEC/EN 61000-4-2	Contact ±4kV (without external components, Signal port)	Perf. Criteria B
	EFT	IEC/EN 61000-4-4	±2kV (without external components, Signal port)	Perf. Criteria B
	Surge	IEC/EN 61000-4-5	±2kV (line to ground) (without external components, Signal port)	Perf. Criteria B
	CS	IEC/EN 61000-4-6	3Vr.m.s (without external components)	Perf. Criteria A

MORNSUN Guangzhou Science & Technology Co., Ltd. reserves the copyright and right of final interpretation

Application Precautions

1. Carefully read and follow the instructions before use; contact our technical support if you have any question;
2. Do not use the product in hazardous areas;
3. Use only DC power supply source for this product. 220V AC power supply is prohibited;
4. It is strictly forbidden to disassemble the product privately in order to avoid product failure or malfunction;
5. Hot-swap is not supported;
6. If the external input of TXD is insufficient, the pull-up resistor should be added according to the situation.

After-sales service

1. Factory inspection and quality control are strictly enforced before shipping any product; please contact your local representative or our technical support if you experience any abnormal operation or possible failure of the module;
2. The products have a 3-year warranty period, from the date of shipment. The product will be repaired or exchanged free of charge within the warranty period for any quality problem that occurs under normal use.

Applied circuit

Refer to the CAN Industrial Bus Interface Isolating Module Application Manual.

Design Reference

1. Typical application circuit

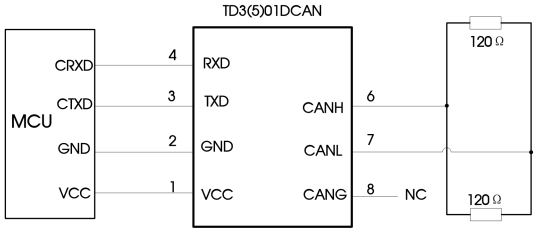

Fig.1

Figure 1 shows a typical application circuit for connecting a module. The module with its integrated power supply, CAN controller and CAN bus network interface can generally be used by customers as is, without the need of adding peripheral circuits.
Note: The logic level of the CAN controller should be compatible with the TD5(3)01DCAN.

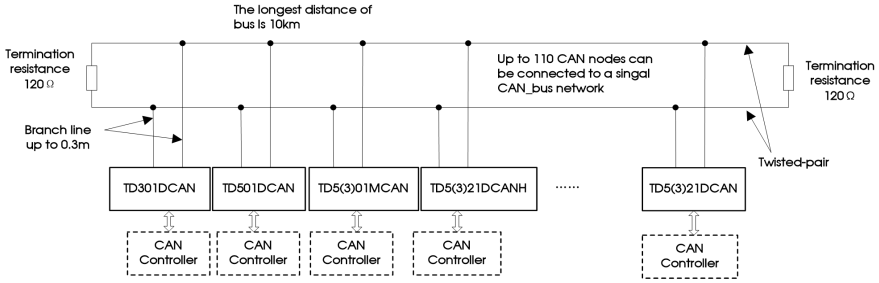

Fig.2

As shown in Figure 2, a single CAN-bus network allows connecting as many as 110 isolated single-channel TD_CAN transceiver modules. This universal type module supports a maximum communication distance of 10km while the high-speed type module can support a maximum communication distance of 1km with a baud rate beyond 40kbps. For accessing more nodes or achieving longer communication distances, CAN repeaters or other expansion equipment can easily be used.
Note: The communication distance of the bus is related to the communication speed and its field application. It can be designed according to the actual application and reference standard. We recommended the use of a twisted pair or shielded twisted pair as the communication cable and it should be kept away from any sources of interference. For long-distance communication, the terminal resistance value needs to be selected in accordance with the communication distance, the cable impedance and the number of nodes.

MORNSUN Guangzhou Science & Technology Co., Ltd. reserves the copyright and right of final interpretation

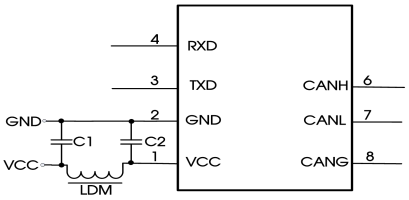

Component	Recommended part, value
C1, C2	1uF/16V
LDM	CD43-12uH

Fig.3

2. Recommended port protection circuit

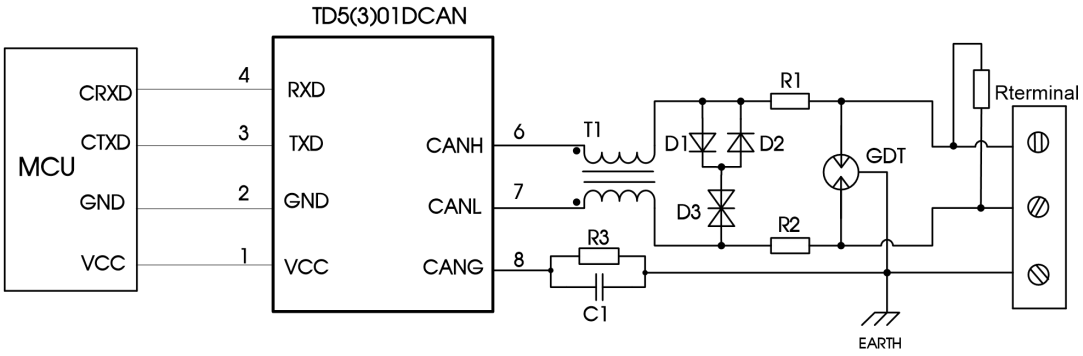

Fig.4

Note: Ground shield of twisted wire pair reliably.
Recommended components and values:

Component	Recommended part, value	Component	Recommended part, value
R3	1MΩ	R1, R2	2.7Ω/2W
C1	1nF, 2kV	D1, D2	1N4007
T1	ACM2520-301-2P	D3	SMBJ30CA
GDT	B3D090L	Rterminal	120Ω

When the module is used in applications with harsh environment, it can be susceptible to large energy like lightning strike, etc. in which case, it is essential to add an adequate protection circuit to the CAN signal ports to protect the system from failure and maintain a reliable bus communication. Figure 4 provides a recommended protection circuit design for high-energy lightning surges, with a degree of protection related to the selected protection device. Parameter description lists a set of recommended circuit parameters, which can be adjusted according to the actual application situation. Also, when using the shielded cable, the reliable single-point grounding of the shield must be achieved.

Note: The recommended components that will change the Specifications of Bus Pin Maximum Withstand Voltage by D3 and its values is a general guideline only. It must be verified for the actual user's application. We recommended using PTC's for R1 and R2 and to use fast recovery diodes for D1 and D2.

3. For additional information, please refer to our application note on www.mornsun-power.com

MORNSUN Guangzhou Science & Technology Co., Ltd. reserves the copyright and right of final interpretation

Dimensions and Recommended Layout

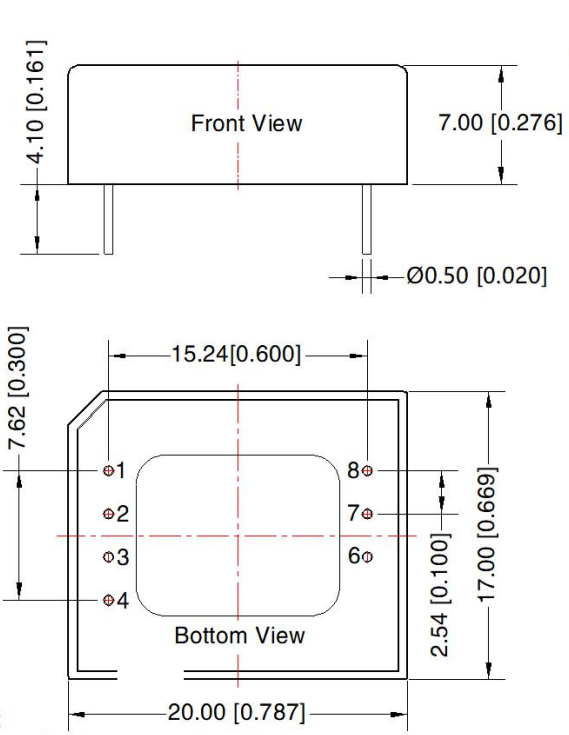

Note:
Unit: mm[inch]
Pin1/2/3/4/5/6/7/8 : Ø0.5mm
Pin diameter tolerances: ± 0.10[± 0.004]
General tolerances: ± 0.50[± 0.020]
The layout of the device is for reference only, please refer to the actual product

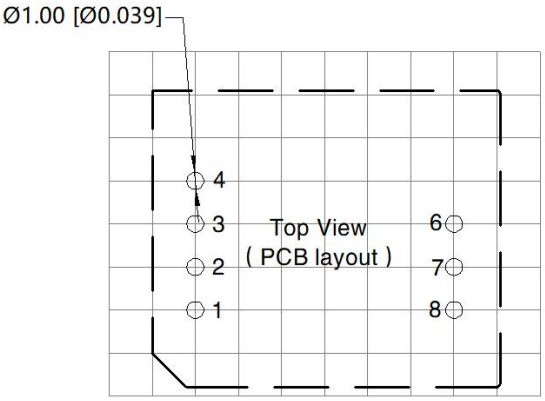

Note: Grid 2.54*2.54mm

Pin–Out		
Pin	Mark	Function
1	VCC	Input Power+
2	GND	GND
3	TXD	Driver input
4	RXD	Receiver output
6	CANH	TD–DCAN H Pin
7	CANL	TD–DCAN L Pin
8	CANG	Isolation Power Output CANG

Notes:

1. For additional information on Product Packaging please refer to www.mornsun-power.com. The Packaging bag number: 58040012;
2. Unless otherwise specified, parameters in this datasheet were measured under the conditions of Ta=25℃, humidity<75%RH with nominal input voltage and rated output load;
3. All index testing methods in this datasheet are based on company corporate standards;
4. The above are the performance indicators of the product models listed in this datasheet. Some indicators of non-standard models will exceed the above requirements. For details, please contact our technical staff;
5. We can provide product customization service, please contact our technicians directly for specific information;
6. Products are related to laws and regulations: see "Features" and "EMC";
7. Our products shall be classified according to ISO14001 and related environmental laws and regulations, and shall be handled by qualified units.

MORNSUN Guangzhou Science & Technology Co., Ltd.
Address: No. 8 Nanyun 4th Road, Huangpu District, Guangzhou, China
Tel: 86-20-38601850 Fax: 86-20-38601272 E-mail: info@mornsun.cn www.mornsun-power.com

MORNSUN Guangzhou Science & Technology Co., Ltd. reserves the copyright and right of final interpretation