Signal conditioning module
TxxxxHL Series

MORNSUN®

Two-wire loop power supply signal conditioning module
HART signal transmission available



CE Report RoHS
EN62368-1

3 years Warranty

FEATURES

- Two-wire self-powered signal conditioning module with HART transmitter
- Loop power collection
- High accuracy of 0.1% Full Scale
- High linearity of 0.1% Full Scale
- High isolation test voltage of 2kVAC (60s/1mA)
- Small SIP9 size measuring 26 x 9.5 x 12.5mm
- Extremely low temperature coefficient of 50PPM/℃
- Operating ambient temperature range -40℃ to +85℃
- HART compatible

TxxxxHL is a specific signal conditioning module for smart field instruments with HART (Highway Addressable Remote Transducer). The module powering the front-end equipment through the back-stage current loop collection mode and transmitting the voltage to an industry standard isolated 3.7-22mA output current. The module also offers an isolated micro-power which can be used for the peripheral devices. In addition, the module can realize the half duplex communication of the field and control area by means of an integrated HART signal channel, which greatly reduces the cost for wiring between the field and the control area also shown in detail in Design Reference. This accurate isolated voltage signal to 3.7-22mA current conversion can be used in a variety of analog instrument input ports such as PLC and DCS systems, or similar. In addition, this module has extremely small SIP9 form factor with excellent temperature drift characteristics of less than 50PPM / ℃ across the entire -40 ℃ to +85 ℃ operating temperature range. This module adopts unique electromagnetic isolation mode that allows it to withstand 2kVAC isolation test voltage between input and output.

Selection Guide

Certification	Part No.	Loop powered voltage (VDC)	Input Signal(VDC)	Output Signal(mA)	Isolated Power Output (VDC)
EN	T797HL	15-24	0-2.5	3.7-22	3.3
	T747HL	10-24	0-2.5	3.7-22	3.3

Note: Customization of products is available on request.

Input Specifications

Item		Operating Conditions	Value
Power Input	Loop Power Supply		See selection guide
	Max. Supply Voltage		30V (prolonged operation with 30V under no-load condition may cause over-heating and damage)
Signal Input	Input Signal		See selection guide
	Input Impedance		≥10MΩ
	Overload		≤5V

Output Specifications

Item		Operating Conditions		Value
Isolated Power Output	Output Voltage			See selection guide
	Output Voltage Accuracy	TA=25℃		Nominal ±3%
	Max. load Current	TA=25℃, Loop current 4mA	T797HL	9mA
			T747HL	4mA
	Short Circuit Protection			Continuous, auto-recovery
Signal Output	Output Signal			See selection guide
	Load Capacity	T797HL		RL≤(Vin–15)/0.022Ω, Vin = supply voltage
		T747HL		RL≤(Vin–10)/0.022Ω, Vin = supply voltage
	Load Regulation	24V power supply, 0-250Ω load		≤0.05% Full Scale/100Ω
	Ripple & Noise	250Ω/0.01μF load		Vp-p ≤30mV @ bandwidth 20MHz

MORNSUN Guangzhou Science & Technology Co., Ltd. reserves the copyright and right of final interpretation

Transmission Specifications

Item	Operating Conditions	Value
Zero Offset		0.1% Full Scale
Transmission Error		0.1% Full Scale
Temperature Coefficient	Operating temperature range of -40℃ to +85℃	≤50PPM/℃
Communication	Vpp ≤250mV	Supports bi-directional transmission of HART signal frequency
HART Signal Transmission Gain	HART Accept the voltage gain	0.8-1.0
	HART Signal emission current peak-peak, the loop current 4mA	＞1mA

General Specifications

Item	Operating Conditions	Value
Electric Isolation		Two-terminal (input to output) isolation
Isolation Test	Electric strength test for 1 minute with a leakage current <1mA, humidity <70%RH	2.0kVAC
Insulation Resistance	At 500VDC	≥100MΩ
Operating Temperature		-40℃ to +85℃
Transportation and Storage Temperature		-50℃ to +105℃
Maximum Case Temperature	Ta=25℃, 24V Power supply, 250Ω load	≤50℃
Safety Standard		EN62368-1 (Report)
Safety Class		CLASS III
Application Environment		The presence of dust, severe vibration, shock and corrosive gas may cause damage to the product.

Mechanical Specifications

Case Material	Black plastic, flame-retardant heat- resistant
Package	SIP9
Weight	8.0g(Typ.)
Cooling	Free convection

Electromagnetic Compatibility (EMC)

Immunity	ESD	IEC/EN61000-4-2	Contact ±4kV	perf. Criteria B
	RS	IEC/EN61000-4-3	3V/m	perf. Criteria A
	EFT	IEC/EN61000-4-4	Two-wire loop port ±2kV (see Fig. 5 for recommended circuit)	perf. Criteria B
	Surge	IEC/EN61000-4-5	Two-wire loop port ±1kV (see Fig. 5 for recommended circuit)	perf. Criteria B
	CS	IEC/EN61000-4-6	3 Vr.m.s	perf. Criteria A

Product Characteristic Curve

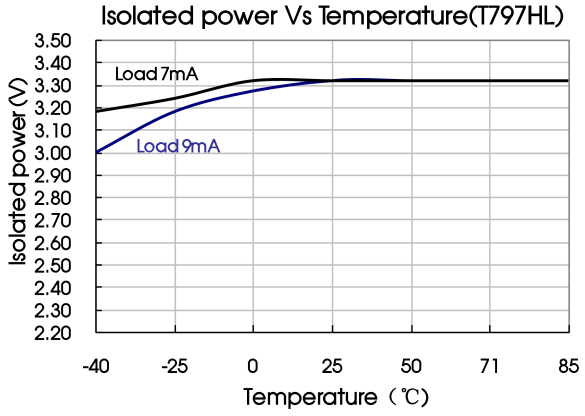

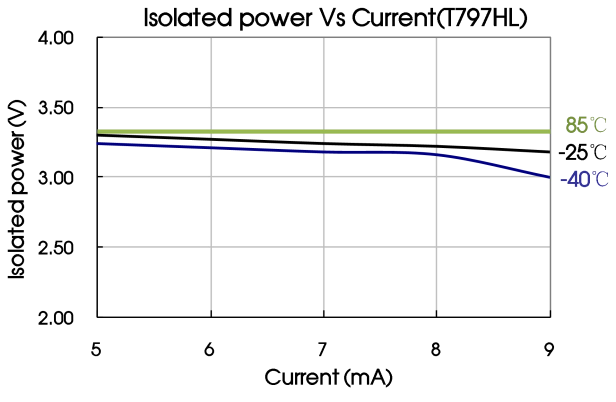

MORNSUN Guangzhou Science & Technology Co., Ltd. reserves the copyright and right of final interpretation

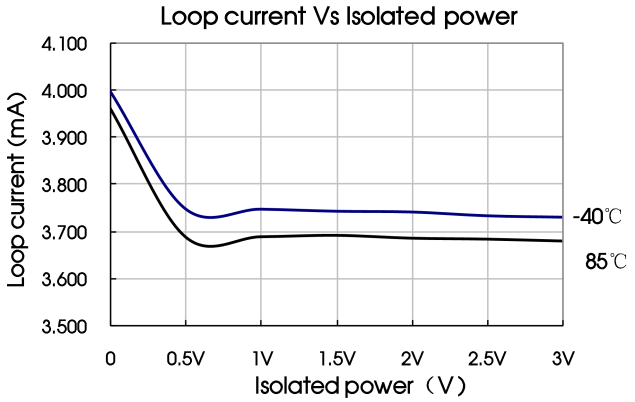

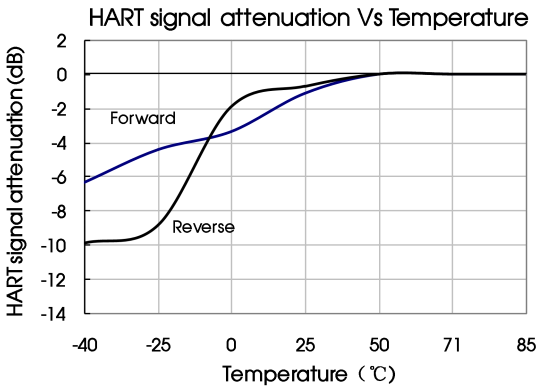

Note: ①The all test results is typical curves, and tested under the 4mA loop current;
②Forward: Two-wire loop to device direction; Reverse: Device to Two-wire loop direction.

Application Precautions

1. Carefully read and follow the instructions before use; contact our technical support if you have any question;
2. Do not use the product in hazardous areas;
3. Use only DC power supply source for this product and 220V AC power supply is prohibited;
4. It is strictly forbidden to disassemble the product privately in order to avoid product failure or malfunction.

After-sales service

1. Factory inspection and quality control are strictly enforced before shipping any product; please contact your local representative or our technical support if you experience any abnormal operation or possible failure of the module;
2. The products have a 3-year warranty period, from the date of shipment. The product will be repaired or exchanged free of charge within the warranty period for any quality problem that occurs under normal use.

Applied circuit

See *Application Notes for Signal conditioning module application manual.*

Design Reference

1. Typical application

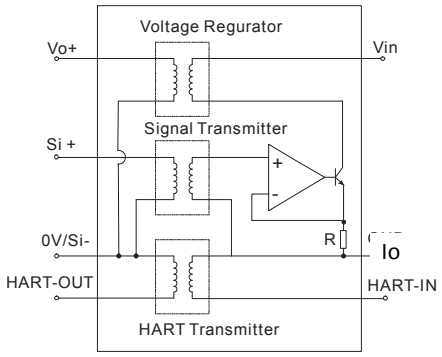

Fig. 1 signal conditioning module functional diagram

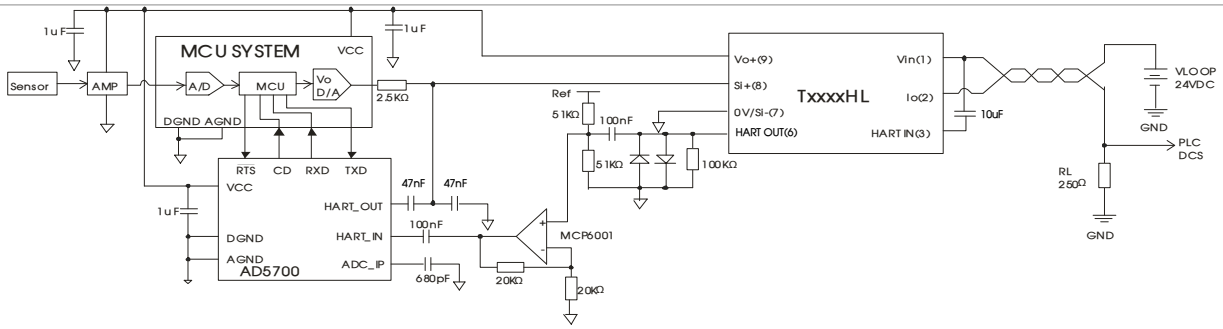

Fig. 2 field area HART communication application

MORNSUN Guangzhou Science & Technology Co., Ltd. reserves the copyright and right of final interpretation

Functional Description

Figure 2 shows a typical application of the TxxxxHL Signal conditioning module. MCU system, HART modem IC AD5700 and the Signal conditioning module TxxxxHL work together to establish the communication between smart field devices and control systems.

How it Works

As figure 2, the signal conditioning module taking energy from the output current Loop to supply its internal dissipation, at the same time, it could provide one isolated power Vo+, for the MCU system and the other smart field devices. The Analog signal comes from sensor, after the AMP module, it is received by the MCU system, when the signal is output from the MCU system, it should be a voltage signal that match with the Signal conditioning module TxxxxHL at the range of voltage, at last, the voltage signal is converted to standard 3.7-22mA signal within the two-wire current loop.

HART send: the signal conditioning module TxxxxHL didn't provides a single channel for HART signal transmitting from field area to control systems, but a common channel with analog signal. With a few external components, the signal which come from MCU, is modulated and added into the analog signal, and they will be send to control systems together. The peak voltage of HART signal must be consider before communication, the peak voltage of the Hart Signal that output by AD5700 is too high to match the range of TxxxxHL (500mV typically, see the datasheet of AD5700 for details), two external capacities of 47nF and a resistance of 2.5K is recommended to drop Voltage.

HART detect: Working with a external 10μF capacity, TxxxxHL can detect HART signal which is contained in the two-wire loop-circuit by the HART_IN PIN(PIN 3). After the condition of TxxxxHL, HART signa has been Transmitted to field area, at last, HART signal is demodulated by IC AD5700, for the reading of MCU. By the way, HART signal could not be demodulated by IC AD5700 if its amplitude is lower then the value of specification (100mV typically, see the datasheet of AD5700 for details). In this condition, the peak voltage of HART signal which is send by control system should be upgraded.

The hole system which shown in Fig.2, provides a solution for the Transmitting of the sensor signal to the 3.7-22mA standard current signal and the HART communicating between smart field devices and control systems, what's more, all the connections between field area and control area are only two analog wires, therefore, lower cost for systems is possible. In the control systems, a resistor RL should be concluded for the detecting of common instruments. If the function of HART communicating is not necessary, please remove the HART modem IC A5700 in the system, and do not connect the HART_IN PIN and HART_OUT PIN of TxxxxHL into any circuits.

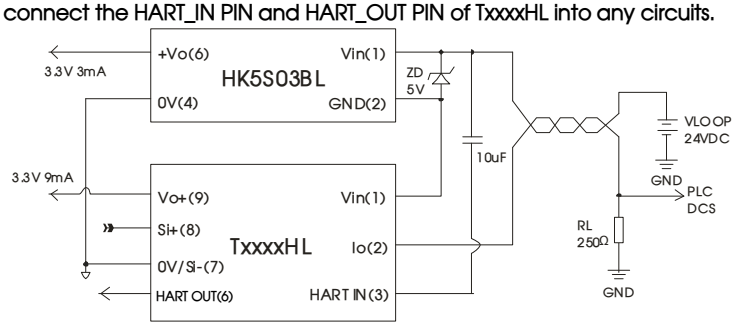

Fig. 3 Power capacity expansion program of field area

Functional Description

Figure 3 shows another typical application of a TxxxxHL module for expanding power supply to field area, a power module HK5S03BL is being added into the system. The TxxxxHL's power supply capacity of 3mA is being extended to 12mA just by adding the HK5S03BL module.

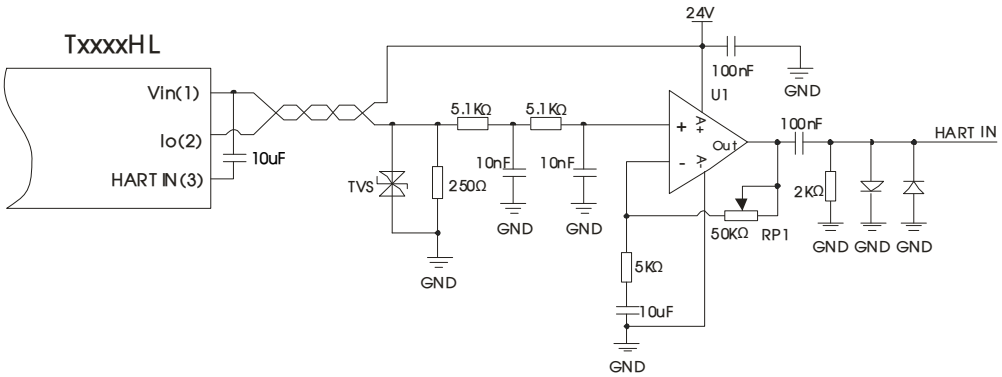

Fig. 4 HART signal amplification method

MORNSUN Guangzhou Science & Technology Co., Ltd. reserves the copyright and right of final interpretation

Functional Description

Figure HART host communication signal amplification circuit, is designed to solve the problem of HART signal attenuation in long cable transmission application.

How it Works

The analog signal conversion: the use of a 250Ω resistor current signal into a voltage signal. TVS protection port, recommend using 12V or 15V TVS.

HART receives the signal filtering, amplification and limiting: HART current signal in the 250Ω resistor is converted to voltage signal , through low pass filter, the filter cut-off frequency is about 2.5KHz, filter the high frequency noise, keep the analog signal as a DC offset signal amplification. After filtering, HART signal through AC amplifying circuit, the AC gain can be adjusted by adjusting the RP1, the adjusting range is 1-11 times. Next, through a high pass filter, filter out the DC offset and low frequency interference, the cut-off frequency is about 800Hz. Finally the two diodes and achieve the limit, the voltage limit at ±0.7V, protect AD5700 port.

2. Signal input and output correspondence diagram(Ideal state)

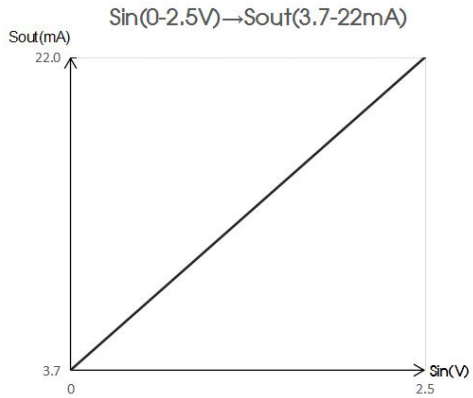

3. EMC compliance, recommended circuit

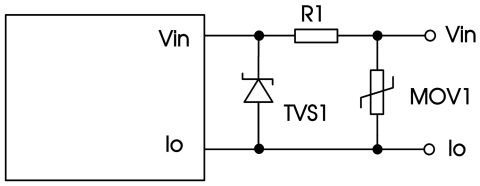

Fig. 5

Component	Recommended part, value
MOV1	7D470k
R1	12Ω/2W
TVS1	SMCJ30A

4. For additional information please find the application notes on www.mornsun-power.com

MORNSUN Guangzhou Science & Technology Co., Ltd. reserves the copyright and right of final interpretation

Dimensions and Recommended Layout

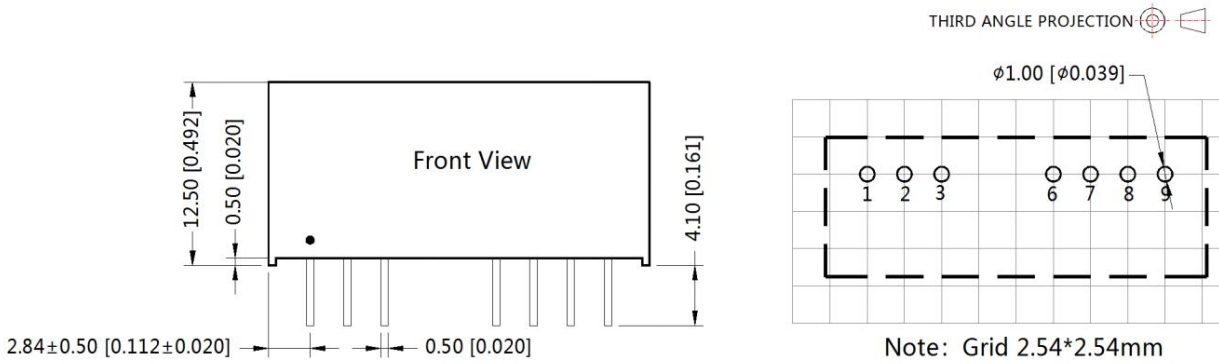

Pin-Out		
Pin	Function	
1	Vin	Power input
2	Io	Current output
3	HART_IN	HART Signal input
6	HART_OUT	HART Signal output
7	0V/Si-	Distribution GND
8	Si+	Signal input +
9	Vo+	Distribution Power output +

Note:
Unit: mm[inch]
Pin section tolerances: ±0.10[±0.004]
General tolerances: ±0.25[±0.010]

Notes:

1. For additional information on Product Packaging please refer to www.mornsun-power.com. The Packaging bag number: 58200013;
2. Unless otherwise specified, parameters in this datasheet were measured under the conditions of Ta=25℃, humidity<75%RH with nominal input voltage and rated output load;
3. All index testing methods in this datasheet are based on company corporate standards;
4. The above are the performance indicators of the product models listed in this datasheet. Some indicators of non-standard models will exceed the above requirements. For details, please contact our technical staff;
5. We can provide product customization service, please contact our technicians directly for specific information;
6. Products are related to laws and regulations: see "Features" and "EMC";
7. Our products shall be classified according to ISO14001 and related environmental laws and regulations, and shall be handled by qualified units.

MORNSUN Guangzhou Science & Technology Co., Ltd.
Address: No. 8 Nanyun 4th Road, Huangpu District, Guangzhou, China
Tel: 86-20-38601850 Fax: 86-20-38601272 E-mail: info@mornsun.cn www.mornsun-power.com

MORNSUN Guangzhou Science & Technology Co., Ltd. reserves the copyright and right of final interpretation