Signal conditioning modules
TFxxxxN Series

MORNSUN®

Active high precision output signal conditioning module

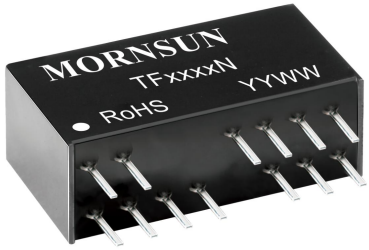

CE Report RoHS
EN 62368-1

FEATURES

- Two-port isolation (signal input and signal output)
- High accuracy, High linearity of 0.1% Full Scale
- Isolation test voltage 2kVAC (60s)
- Low ripple & noise ≤30mVpp (20MHz)
- Extremely low temperature coefficient ≤50PPM/℃ over entire -40℃ to +85℃ range
- Compact DIP18 size measures 26 x 9.5 x 12.5mm

The TFxxxxN series is a high precision isolated transmitter with an inner high efficiency isolated micro-power source. It can provide isolation power to peripheral circuit at the same time of providing power to internal signal processing circuit. The adopted electromagnetic isolation technology has a much higher linearity and a lower temperature drift in comparison with photo/opto-coupler isolators. They have a two-terminal isolation from signal input/power input to signal output/power output. The series with external functions for zeros and full adjustment via potentiometers (Offset/Gain) offers a convenient way for design and adjustment to our customers.

Selection Guide

Certification	Model	Power Supply input Typ. (VDC)	Input Signal	Output Signal	Isolated Power Output (VDC)
EN	TF5134N	24	0-10V	4-20mA	15
	TF5234N	24	0-10V	0-20mA	15
	TF5534N	24	0-10V	0-10V	15
	TF5554N	12	0-10V	0-10V	15
	TF5634N	24	0-10V	0-5V	15
	TF6134N	24	0-5V	4-20mA	15
	TF6234N	24	0-5V	0-20mA	15
	TF6250N	12	0-5V	0-20mA	None
	TF6254N	12	0-5V	0-20mA	15
	TF6664N	5	0-5V	0-5V	15
--	TFS160N-3.3	5	0-3.3V	4-20mA	None
--	TF6250N-G	12	0-5V	0-20mA	None

Input Specifications

Item		Operating Conditions	Min.	Typ.	Max.	Unit
Power Input	Input Voltage		Typ.-5%	Typ.	Typ.+5%	V
	Input Power	Voltage output	--	--	1.5	W
		Current output	--	--	2.0	W
	Power Protection		Input reverse polarity protection			
Signal Input*	Input Signal		See selection guide			
	Input Impedance	in case of max. input of voltage signal	10	--	--	MΩ
	Over Range	in case of input of voltage signal	--	--	30	V

Note: * When the input signal port is open circuit, if the output signal value need near 0, please connect a resistor (＜100kΩ) in parallel at the signal input port of the model.

Output Specifications

Item		Operating Conditions	Min.	Typ.	Max.	Unit
Isolation Power Output	Output Voltage	Isolation power output at full load	Typ.-10%	Typ.	Typ.+10%	V
	Output Current		--	--	25	mA
Signal Output	Output Signal		See selection guide			
	Load Capacity	Current output	--	--	500	Ω
		Voltage output	2	--	--	kΩ
	Ripple & Noise	20MHz bandwidth	--	--	30	mVpp

MORNSUN Guangzhou Science & Technology Co., Ltd. reserves the copyright and right of final interpretation

Transmission Specifications

Item	Operating Conditions	Min.	Typ.	Max.	Unit
Zero Offset	Ta=25℃	-0.1%FS	--	+0.1%FS	--
Signal Precision	Ta=25℃	-0.1%FS	--	+0.1%FS	--
Temperature Coefficient	Operating temperature from -40℃ to +85℃	--	--	50	PPM/℃
Adjustable Function	Full degree regulation	-5%FS	--	+5%FS	--
	Zero regulation	-5%FS	--	+5%FS	--
Bandwidth		2	--	--	kHz
Response Time		--	--	1	ms

General Specifications

Item	Operating Conditions	Min.	Typ.	Max.	Unit
Electric Isolation		Isolated between the signal input and the signal output			
Isolation Voltage	Electric strength test for 1 minute with a leakage current <1mA, humidity <70%RH	2	--	--	kVAC
Insulation Resistance	At 500VDC	100	--	--	MΩ
Operating Temperature		-40	--	+85	℃
Transportation and Storage Temperature		-50	--	+105	℃
Safety Standard		EN62368-1 (Report)			
Safety Class		CLASS III			
Application Environment		The presence of dust, severe vibration, shock and corrosive gas may cause damage to the product			

Mechanical Specifications

Case Material	Black plastic, flame-retardant heat- resistant
Package	DIP18
Weight	5.5g(Typ.)
Cooling Method	Free air convection

Electromagnetic Compatibility (EMC)

Emissions	CE		CISPR32/EN 55032	CLASS A (see Fig. 5 for recommended circuit)	
Immunity	ESD	TF6250N-G	IEC/EN61000-4-2	Contact ±2kV	perf. Criteria B
		Others	ANSI/ESDA/JEDEC JS-001	HBM ±4kV	
	EFT		IEC/EN61000-4-4	Isolation power output port & single output port ±2kV (see Fig. 5 for recommended circuit)	perf. Criteria B
	Surge		IEC/EN61000-4-5	Isolation power output port & single output port ±1kV (line-to-ground) (see Fig. 5 for recommended circuit)	perf. Criteria B

Application Precautions

1. Carefully read and follow the instructions before use; contact our technical support if you have any question;
2. Do not use the product in hazardous areas;
3. Use only DC power supply source for this product. 220VAC power supply is prohibited;
4. It is strictly forbidden to disassemble the product privately in order to avoid product failure or malfunction;

After-sales service

1. Factory inspection and quality control are strictly enforced before shipping any product; please contact your local representative or our technical support if you experience any abnormal operation or possible failure of the module;
2. The products have a 3-year warranty period, from the date of shipment. The product will be repaired or exchanged free of charge within the warranty period for any quality problem that occurs under normal use.

MORNSUN Guangzhou Science & Technology Co., Ltd. reserves the copyright and right of final interpretation

Applied circuit

Please refer to Isolated Transmitter Application Notes.

Design Reference

1. Typical application

1) Schematic diagram

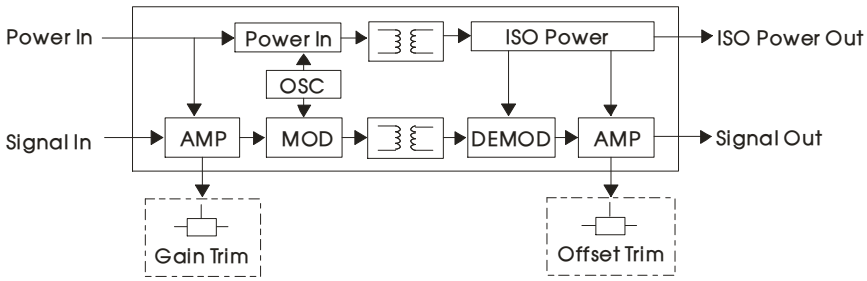

Fig. 1

2) Schematic diagram of signal input and signal output(Ideal state)

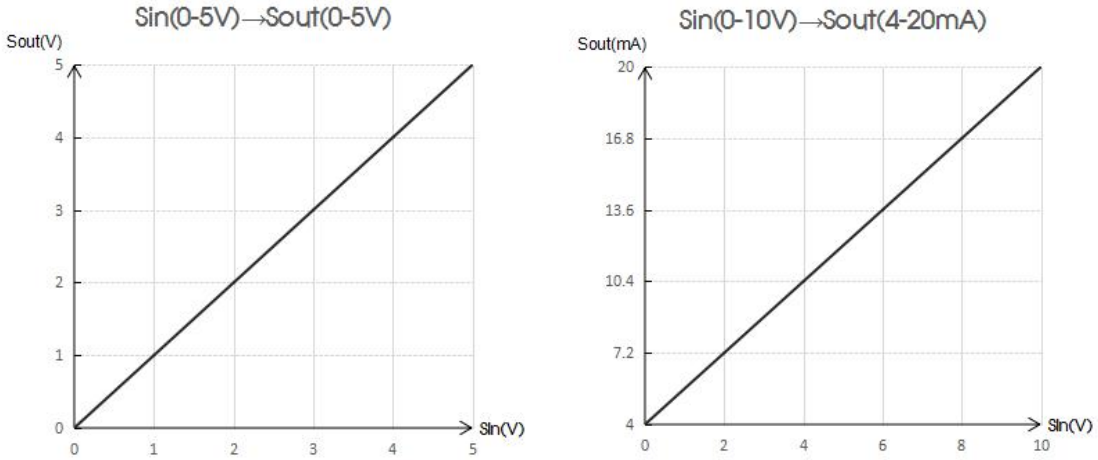

Fig. 2

3) Typical application——Isolation of AO board card in DCS system

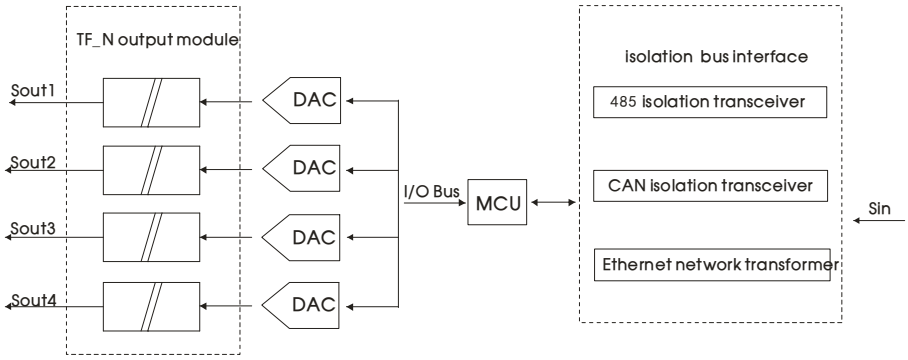

Fig. 3 Isolation application figure of AO board card in DCS system

Functional Description

As shown in figure 3, Sin are the input signals from a peripheral circuit fed to through the isolated bus-interface (485 transceiver, CAN transceiver and Ethernet network transformer) to the MCU. The MCU control system processes the received signals into digital output signals. DAC is the digital to analog converter that transforms the digital signals into analog signals feeding them to the TF_N output module, which isolates the analog output signals transferred from the DAC into multiplex outputs signals Sout1, Sout2, Sout3 and Sout4.

MORNSUN Guangzhou Science & Technology Co., Ltd. reserves the copyright and right of final interpretation

How it Works

When the circuit works, peripheral circuit provides input signals Sin, and it transfers input signals to MCU control system by isolated bus interface. The MCU receives the signals and manage them, then output digital signals The digital signals are transferred by I/O bus. Digital signals are converted to analog signals through DAC. After these analog signals get through TF_N output module, we can get isolation signals. The whole working process realizes that the inner signals of control system are isolated with the peripheral circuit and the output signals,Sout1,Sout2,Sout3 and Sout4 are isolated and not interfere with each other.

4) Application——Zero and full adjustment function

Recommended setting procedure for Zero and Full adjustment

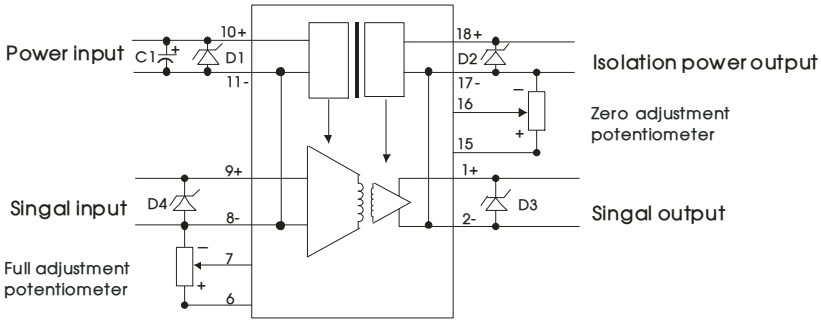

Fig. 4 Zero and full adjustment circuit

Functional Description

The Zero adjustment function can change the zero-signal transmission by setting the adjustment resistor to zero point, which makes the output signal overall migration. The Full adjustment function, also called gain adjustment, changes the signal transmission ratio by setting up the corresponding adjustment resistance for the full range. This changes the isolation transmission proportion of input and output signal value.

Usage

Adding and reducing negative zero resistance can lower the zero point of the signal output. Adding and reducing positive zero resistance can raise the zero point of the signal output. Adding and reducing negative full adjustable resistance can lower the ratio of signal transmission and adding and reducing negative full adjustable resistance can raise the ratio of the signal transmission. Use the potentiometers to adjust the output signal for zero and full adjustment accordingly to suite the application. As shown in the figure 4, the terminal of full or zero adjustment is connected to the slider of the respective potentiometer, and either end of the potentiometers are the zero or full reference for positive and negative regulation. Sliding potentiometer to adjust signal full or changing the ratio of rise and fall can also adjust zero and full of the output signal.

As shown in the figure 4, adjusting the potentiometer towards positive can increase zero or full of the corresponding signal and adjusting the potentiometer towards negative can reduce zero or full of the corresponding signal. The maximum recommended potentiometer range is 10kΩ-1MΩ, and the selected potentiometer value is subject to the adjustment accuracy. For high precision fine-tuning, choose a larger potentiometer value and for a coarse wide range adjustment choose a smaller potentiometer value.

Notice

Using the function of zero and full adjustment will affect the original accuracy and due to the effect on temperature drift from the external adjustment resistor and the stability of the potentiometer, the temperature drift of product will be affected as well. For the zero and full adjustment potentiometer, please set the ratio of positive/negative resistance different according to the actual application.

MORNSUN Guangzhou Science & Technology Co., Ltd. reserves the copyright and right of final interpretation

2. EMC compliance circuit

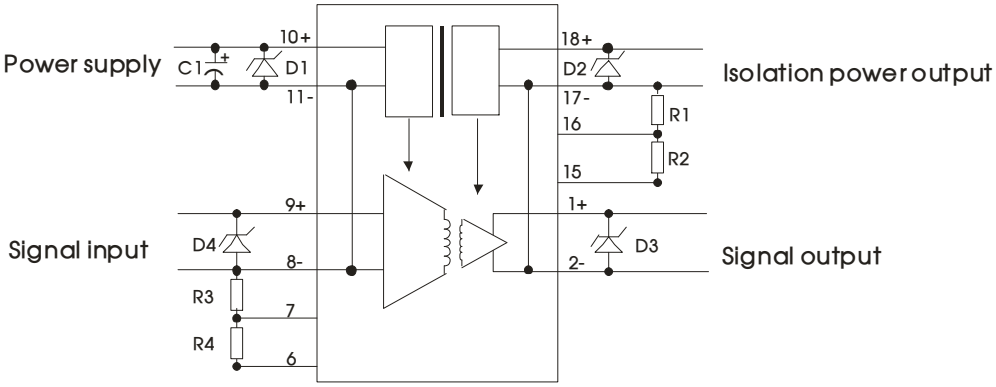

Fig. 5

Component	Recommended part, value
C1	220uF/35V
R1	Negative zero adjustment resistance
R2	Positive zero adjustment resistance
R3	Negative gain adjustment resistance
R4	Positive gain adjustment resistance
D1	SMCJ28A
D2	SMBJ18A
D3	SMBJ15A
D4	SMBJ15A

3. For additional information please find the application notes on www.mornsun-power.com

MORNSUN Guangzhou Science & Technology Co., Ltd. reserves the copyright and right of final interpretation

Dimensions and Recommended Layout

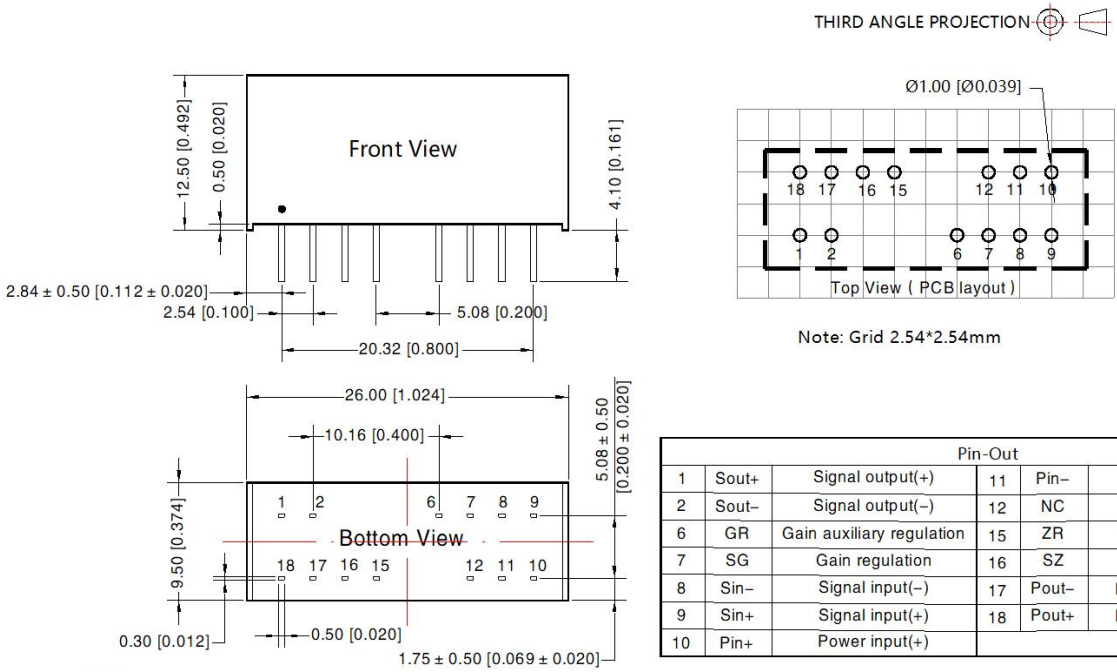

Note:
Unit: mm[inch]
Pin section tolerances: ±0.10[±0.004]
General tolerances: ±0.25[±0.010]

Pin-Out					
1	Sout+	Signal output(+)	11	Pin−	Power input(−)
2	Sout−	Signal output(−)	12	NC	No connection
6	GR	Gain auxiliary regulation	15	ZR	Zero auxiliary regulation
7	SG	Gain regulation	16	SZ	Zero regulation
8	Sin−	Signal input(−)	17	Pout−	Isolation power output(−)
9	Sin+	Signal input(+)	18	Pout+	Isolation power output(+)
10	Pin+	Power input(+)			

Notes:

1. For additional information on Product Packaging please refer to www.mornsun-power.com. The Packaging bag number: 58240002;
2. Unless otherwise specified, parameters in this datasheet were measured under the conditions of Ta=25℃, humidity<75%RH with nominal input voltage and rated output load;
3. All index testing methods in this datasheet are based on company corporate standards;
4. The above are the performance indicators of the product models listed in this datasheet. Some indicators of non-standard models will exceed the above requirements. For details, please contact our technical staff;
5. We can provide product customization service, please contact our technicians directly for specific information;
6. Products are related to laws and regulations: see "Features" and "EMC";
7. Our products shall be classified according to ISO14001 and related environmental laws and regulations, and shall be handled by qualified units.

MORNSUN Guangzhou Science & Technology Co., Ltd.
Address: No. 8 Nanyun 4th Road, Huangpu District, Guangzhou, China
Tel: 86-20-38601850 Fax: 86-20-38601272 E-mail: info@mornsun.cn www.mornsun-power.com

MORNSUN Guangzhou Science & Technology Co., Ltd. reserves the copyright and right of final interpretation